D7R

Track-Type Tractor



Engine		
Engine Model	Cat® C9 ACERT™	
Net Power – ISO 9249	179 kW	240 hp

Weights		
Operating Weight – STD	24 962 kg	55,041 lb
Operating Weight – XR	25 441 kg	56,097 lb
Operating Weight – LGP	27 101 kg	59,758 lb

Features

Cab and Controls
Comfort features, excellent visibility and low-effort controls help improve operator efficiency so they can stay focused and more productive on the job.

Engine and Power Train
The Cat® C9 engine with ACERT™ Technology provides optimal engine performance and reliability, is capable of meeting EPA Tier 2 and EU Stage II emission levels and has been certified to China Stage II (GB 20891-2007) emission standards.

Undercarriage
The Cat elevated sprocket design offers outstanding traction and balance. A variety of undercarriage configurations and components allow the machine to be matched to application needs.

Integrated Electronic Solutions
Grade control systems help improve operator efficiency and accuracy to help get more work done – on time and on budget. Flexibility is improved as well, allowing easy adjustments to specification changes on the job site. The Cat AccuGrade™ system and controls can be integrated from the factory for even greater system reliability.

Serviceability and Support
The D7R is designed with ease of serviceability in mind to help reduce your operating costs and keep the machine at work on the job site. And the D7R comes standard with the renowned service of the Cat dealer network. From preventive maintenance to outstanding parts and service support, Cat dealers excel at keeping you up and running.

Contents

Cab and Controls....3
Engine....4
Power Train....5
Structures....6
Undercarriage....7
Work Tools....8
Integrated Electronic Solutions....9
Serviceability....10
Total Customer Support....11
D7R Track-Type Tractor Specifications....12
D7R Standard Equipment....16
D7R Attachments....17
Notes....18



Caterpillar has been the world leader in Track-Type Tractors for more than a century. The D7R combines legendary Cat product durability and reliability with proven technology designed to reduce emissions while improving your productivity and your bottom line. From rugged structures to fully integrated engine and power train systems, the D7R is a world-class tractor built to help you produce the highest quality work in a variety of applications.

Cab and Controls

Productivity, safety, comfort

Operator Environment

The D7R features an isolation-mounted, pressurized cab that reduces noise and vibration. Large, single pane windows offer good views all around the machine for maximum productivity and enhanced job site safety. The Comfort Series seat is offset by 15 degrees for better visibility. It features fully adjustable positioning and armrests to provide a comfortable platform when working on steep grades or slopes.

Gauges and warning lights on the in-dash instrument cluster are easy to read, even in direct sunlight. The Cat Monitoring System Display gives operators and service technicians easy access to operating and maintenance information. The system provides three levels of warning and system monitoring so the operator can stay informed and still concentrate on the job.

Heating and air conditioning vents evenly distribute airflow within the cab. The cab is pre-wired for a 12-volt or 24-volt radio, equipped with two speakers, an antenna and a radio mount recessed in the headliner.

Dozer and Ripper Controls

All D7R controls are ergonomically designed for low-effort and ease of operation. The dozer and ripper control levers feature pilot-operated hydraulics for added operator comfort and precise control. When the AccuGrade™ system is activated, the dozer is electro-hydraulically controlled. When the operator returns to manual control, the dozer is operated through the pilot hydraulic system.

Throttle Rocker Switch

With the touch of a finger, the rocker switch activates high or low idle. A decelerator pedal gives the operator full control of engine speed when the rocker switch is in the high idle position. Engine speed can also be easily set in any range between high and low idle by simultaneously using the decelerator pedal to set the desired speed and pressing the throttle switch in for three seconds.

Steering and Transmission Control

The operator uses a single handle control to perform all direction and gear selection. The tiller bar control allows the operator to work more precisely in close areas around structures, grade stakes and other machines. Differential Steering provides the finest modulation in the industry.

Work Tool Lock-Out Switch

The work tool lock-out valve prevents inadvertent operation of the hydraulic work tool attachments for added safety.











Engine

Power and reliability



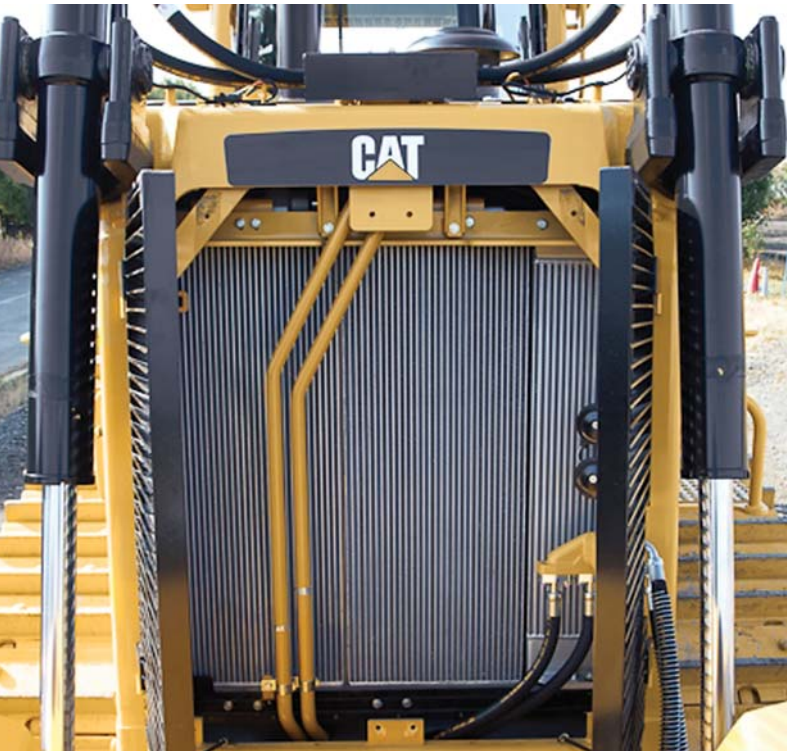

Caterpillar is one of the world's leading engine manufacturers. Every component of a Cat® engine is carefully designed to maximize durability and reliability. Precise controls optimize power and fuel efficiency while reducing emissions. Modular design and advanced electronic diagnostics enhance the engine's serviceability.

ACERT Technology

The D7R features a Cat C9 engine with ACERT™ Technology. A series of Caterpillar innovations provide advanced electronic control, precision fuel delivery and refined air management, resulting in outstanding performance and lower emissions. To help customers work within expanding global regulatory requirements, the C9 engine with ACERT Technology has been certified to China Stage II (GB 20891-2007) emission compliance, equivalent to EPA Tier 2/EU Stage II levels.

ATAAC

The air-to-air aftercooler (ATAAC) – part of the advanced air management system – brings cool air to the engine. This increases life, reduces emissions, and helps maximize fuel efficiency.

Fuel Delivery

Multiple injection fuel delivery very precisely controls the combustion cycle. This lowers combustion chamber temperatures to reduce emissions and translates into more work output per unit of fuel. The Hydraulic Electronic Unit Injector (HEUI™) fuel system controls injection pressure over the entire engine operating speed range for complete control over injection timing, duration, and pressure.

Fractured Split Connecting Rods

Design creates near-perfect joint alignment, maximizing rod bearing life. This, in combination with a high efficiency oil filter, ensures long engine life.

Cat Advanced High Efficiency Oil Filter

Advanced oil filters provide outstanding contamination control for a much cleaner running engine. The advanced filtration is accomplished without the shorter change intervals often required with other brands.

Cooling System

The all new cooling system includes engine radiator, Air-to-Air After Cooler (ATAAC), and hydraulic oil cooler. Engine radiator consists of two units of bar plate cooler, which are connected at the top with hose. The aluminum bar plate construction provides improved durability to debris plugging, abrasion and corrosion resistance.



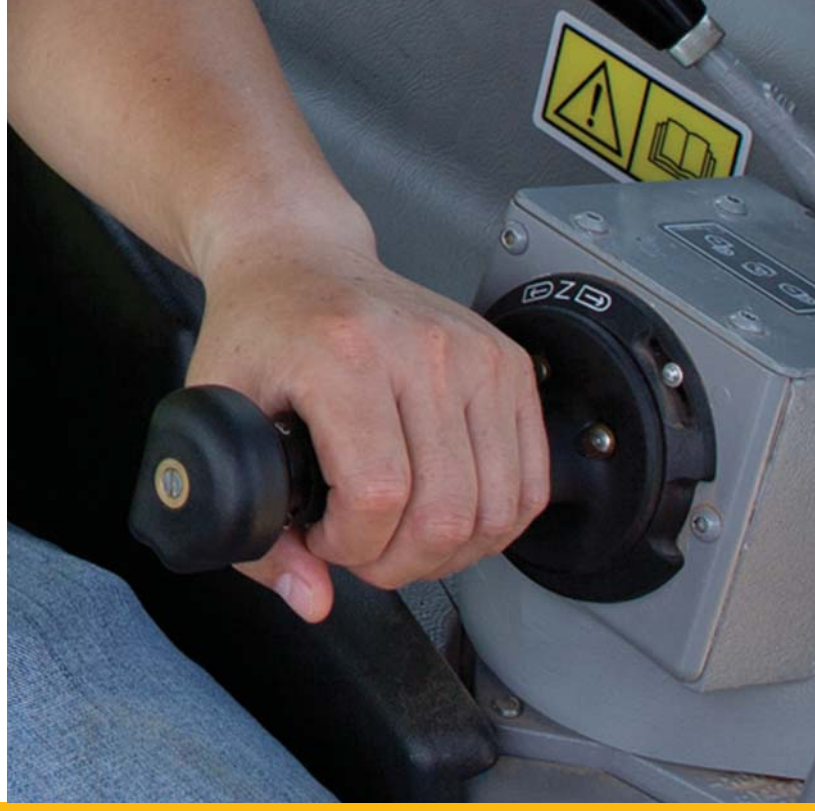

Power Train

Powerful efficiency

The power shift transmission, unique Cat torque divider and differential steering are matched with the C9 engine to deliver outstanding power and reliability. The integrated system efficiently puts more power to the ground, utilizing more of the available horsepower, so you get more done with less.

Differential Steering System

Differential steering puts you on the leading edge of productivity by maintaining power to both tracks while turning. When one track speeds up, the other slows down an equal amount. Maneuverability – especially with large blade loads – is improved, as well as cycle times in other applications. Greater load capacity, power and speed control are possible in soft underfoot conditions on steep slopes because both tracks are powered during turns. A single tiller bar controls all directional and speed functions for ease of operation.

Torque Divider

A unique Cat torque divider sends 70 percent of engine torque through a converter and 30 percent through a direct drive shaft for greater driveline efficiency and higher torque multiplication. The D7R torque divider provides high reliability and low dynamic torque. Components are designed to absorb full engine power, and deliver an optimum combination of operator efficiency and driveline reliability.

Planetary Power Shift Transmission

The transmission includes three speeds forward and three speeds reverse, featuring thick, large diameter, high capacity, oil-cooled clutches. These clutches provide higher torque capacity and increase service life. The planetary power shift transmission has a proven, robust mechanical control system. Modular transmission and differential slide into rear case for servicing ease, even when a ripper is installed. An oil-to-water cooler provides maximum cooling capacity, and forced oil flow lubricates and cools clutch packs for maximum clutch life.

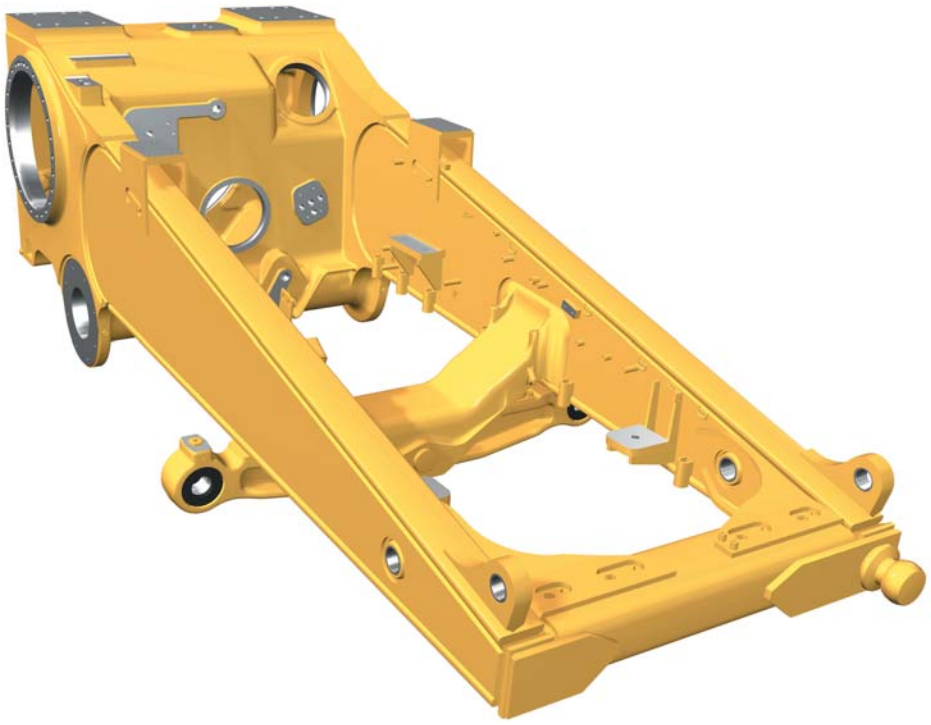

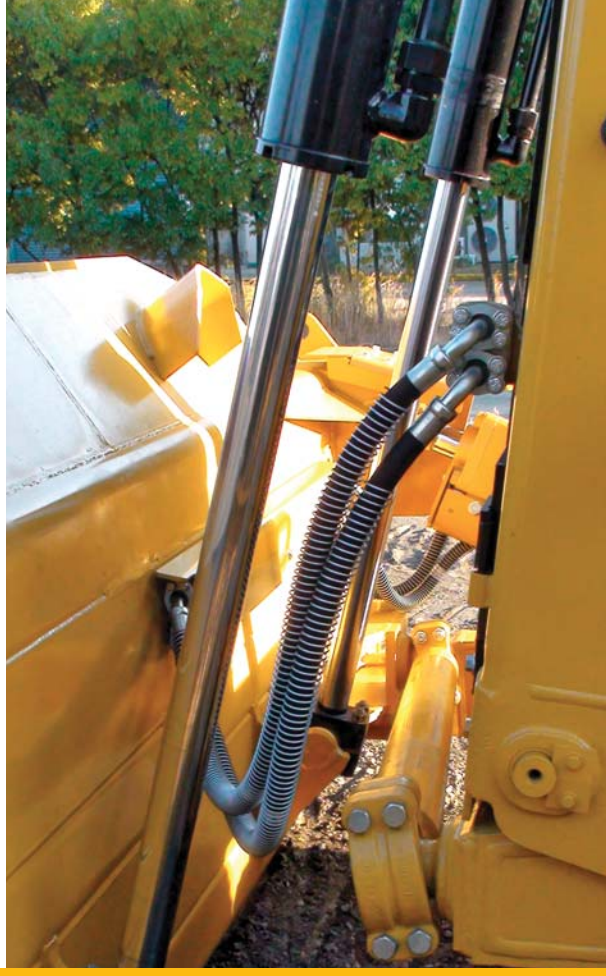

Structures

Rugged design for maximum service

The foundation of every Cat dozer is a rugged frame built to absorb high impact shock loads and twisting forces. Castings provide added strength to the main case and equalizer bar saddle.

The pivot shaft runs through the mainframe and connects the roller frame for independent oscillation. The full-length pivot shaft distributes impact loads throughout the case, reducing bending stresses on the case. This design eliminates alignment problems and the need for diagonal braces on the roller frames.

The pinned equalizer bar gives the roller frames the ability to oscillate up and down to better match ground contours for maximum traction and operator comfort. Equalizer bar end pins are oil filled with limited slip seals for longer life and reduced repair costs.

The D7R also features the tag-link design to mount the blade closer to the machine for excellent maneuverability, machine balance and blade penetration. The tag-link provides solid lateral stability and eliminates the need for diagonal bracing since it transfers side loads to the mainframe instead of dozer push-arms.

Undercarriage

Proven productivity



Since its ground-breaking introduction in 1978, the Cat elevated sprocket undercarriage arrangements allow optimized balance for best possible performance in each application. This is a field-proven design that offers outstanding machine performance and longer component life.

Ground and implement shock loads are transferred to the mainframe to protect final drives, axles and steering components from harsh impacts for longer component life.

The elevated sprocket design gives the operator excellent sight lines to the blade, sides and back of the machine. However, machine center of gravity remains low, offering excellent stability, balance and traction.

Modular power train components make it quick to remove and repair the transmission, final drives, steering differential or brakes.

Modular undercarriage components simplify service. Lifetime lubricated idlers and track/carrier rollers provide the ability to re-use internal components and rebuild or reshell components. This reduces owning and operating costs, and saves raw materials and natural resources.

Heavy Duty Undercarriage

Standard Heavy Duty undercarriage components are designed for extended wear life in abrasive conditions and high impact applications like forestry, side-slopes, or working in rocky or uneven terrain. Heavy duty track is designed for enhanced penetration. The leading and trailing edges of each track shoe overlap the adjacent shoe to increase durability and component life.

Three (3) Undercarriage Arrangements are available:

- **Standard arrangement** – A general purpose undercarriage that performs well in many applications with firm underfoot conditions
- **XR arrangement** – More track to the rear positions the tractors weight forward, which increases traction and stability in drawbar, skidding and ripping applications
- **LGP arrangement** – Specifically designed to work in soft or wet conditions. Wide track shoes, long track frames, and a wider machine gauge increases ground contact area and reduces ground pressure for improved stability requiring flotation in swampy conditions.

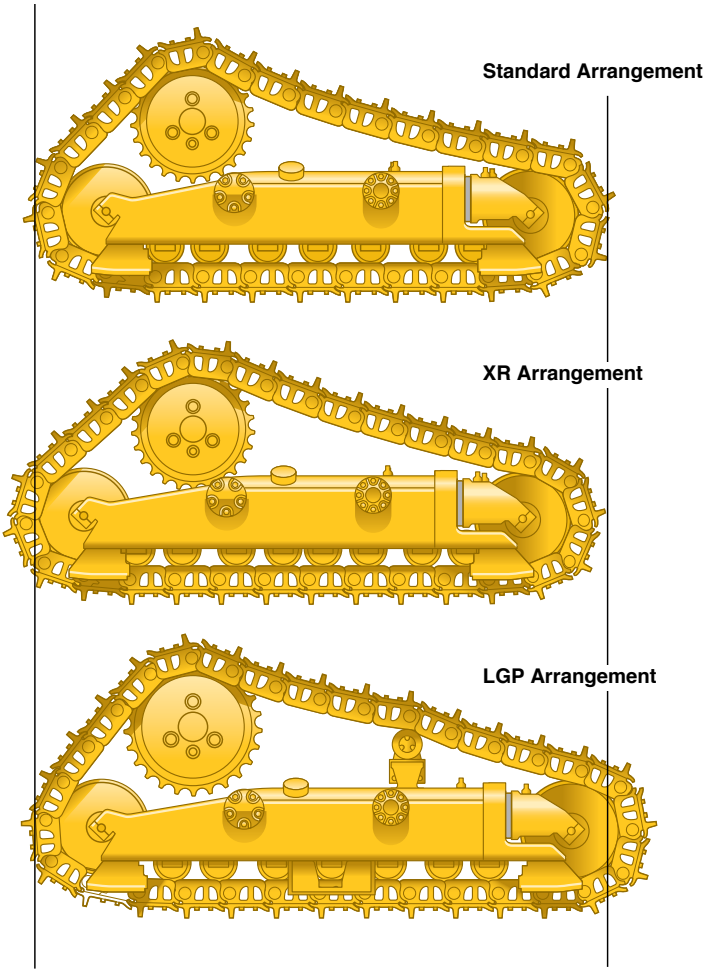

Track Shoes

Moderate Service and Extreme Service track shoes are available to help optimize the machine based on its most frequent applications. Proper track shoe selection helps minimize wear for optimal undercarriage life – especially in high impact or highly abrasive conditions.





Work Tools

Equipped for the job

Load Sensing Hydraulics

Field-proven, load-sensing, pilot controlled hydraulics respond to operating requirements by automatically and continually adjusting hydraulic power to maximize work tool efficiency.

Cat Blades

Blade designs feature a strong box-section design, made from steel with high tensile strength to stand up to the most severe applications. Heavy moldboard construction and hardened bolt-on cutting edges and end bits add strength and durability.

- **Semi-Universal Blade** – designed for superior load retention and penetration in tightly packed materials. The Semi-Universal blades are available with optional Wear Plates for working in abrasive rock conditions.
- **Straight Blade** – available for the LGP machine. The Straight blade features ability to handle heavier material with aggressive cutting capability.

Multi-Shank Ripper

The three-shank adjustable paralleogram ripper is an excellent tool for preparing hard-packed material before dozing operations. The D7R multi-shank ripper also allows the ripper tip angle to be adjustable.

Rear Counterweight

Optimize balance for backing up steep slopes or increasing performance in heavy dozing applications and if another rear attachment is not specified.

Winch

See your Cat dealer for available Winch options best suited to your applications.

Integrated Electronic Solutions

Technology to reduce costs and improve productivity

AccuGrade System for Track-Type Tractors

The AccuGrade system automates blade control for improved grading accuracy and more cost effective operation. Sensors calculate precise blade slope and elevation, then automatically adjust the blade to maintain grade. Automated blade control improves efficiency by reaching grade faster and in fewer passes, reducing the need for traditional survey stakes or grade checkers.

AccuGrade™ Ready Option

AccuGrade systems and controls can be integrated from the factory, making system installation and setup quick and easy. Integration also provides greater system protection and reliability.

AccuGrade Systems

Three (3) systems are available to match the AccuGrade Ready Option integrated ex-factory selection. All calculate necessary blade adjustments to achieve grade, make automatic blade adjustments and calculate cut/fill requirements.

- **LASER** enables automatic blade control to execute 2D profiles and requires direct line of sight to a LASER transmitter. Field-proven and versatile, the dual laser system is ideal for fine grading of sites with flat, single or dual slope surfaces, such as industrial, commercial and residential building sites.
- **Universal Total Station (UTS)** is a high accuracy dynamic system to track a machine and monitor blade positioning. The UTS instrument continuously measures the target's position and transmits real-time positioning data to the operator via the in-cab display showing the exact position of the blade in relation to desired design.
- **Global Satellite Navigation control systems** are the best solution when a site involves contours, rather than single or dual slope planes. This technology uses Satellite Navigation to compare a blades position to a 3D computerized site plan and signals the operator, or automatically through the hydraulic system, to maneuver the blade to achieve the design.

Product Link

The optional Product Link* system is a factory installed or easily retrofitted wireless system that simplifies equipment fleet tracking. Using satellite or cellular technology, it automatically reports key machine parameters such as location, machine hours, active and logged service codes and security alarms.

* Product Link licensing not available in all areas.





Serviceability

Stay up and running





Cat machines are designed with serviceability in mind. Modular components, easy access to regular service points and features that enable quicker diagnostics all add up to less maintenance time and more time on the job.

Cat Monitoring System

The D7R features a monitoring system that provides feedback to operators with easy-to-read gauges and warning lamps that allows the operator to concentrate on the job at hand.

With the use of a Cat Electronic Technician (ET), your Cat dealer can determine historical performance parameters of the machine.

The Cat Monitoring System is designed to:

- Reduce downtime
- Provide warning feedback on operational events
- Provide feedback on machine performance events

Scheduled Oil Sampling (S·O·S^{SM}) Analysis

Monitor machine health and identify key maintenance needs before they lead to downtime through Cat Scheduled Oil Sampling. Cat machines feature live sampling ports for the engine oil, power train hydraulics and coolant. Cat oil sampling offers accurate analysis using tests designed by Caterpillar for Cat products, as well as knowledgeable interpretation of the results.

Built to be Rebuilt

Major components on the D7R are built to be rebuilt, extending the useful life of the machine. Machine and component rebuilds save money, and offer a sustainability element by saving raw materials and natural resources. See your Cat dealer to learn more about rebuild options.

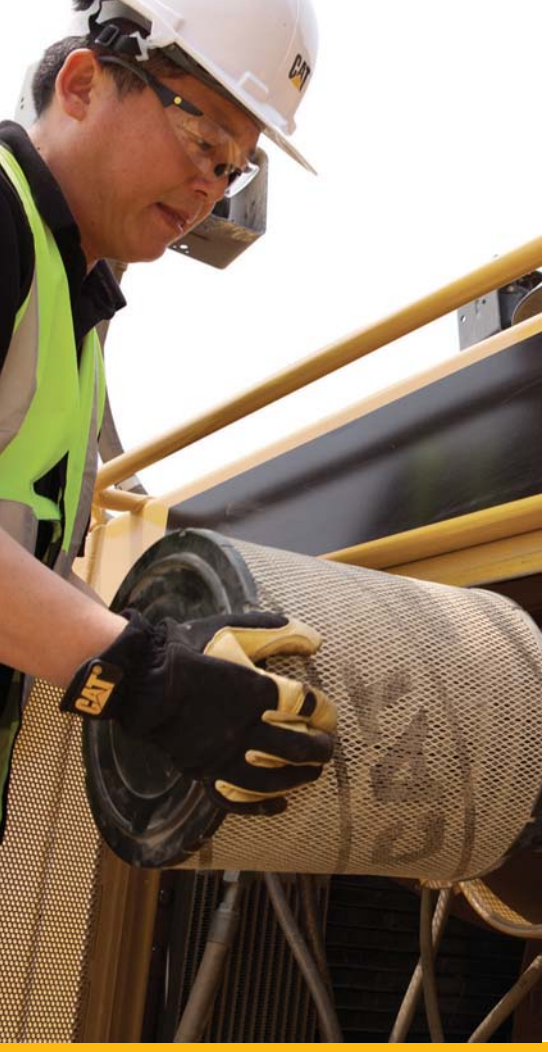



Total Customer Support

Renowned dealer support

Only Cat machines come with the industry's best sales and service support – the Cat dealer network. From helping you choose the right machine to ongoing support, your Cat dealer provides the best in sales and service. Manage your costs with preventive maintenance programs like Custom Track Service, Scheduled Oil Sampling (S·O·S℠) analysis, and guaranteed maintenance contracts. Stay productive with best-in-class parts availability. Your Cat dealer can even help with operator training to help you boost your profits.

And when it's time for replacement, your Cat dealer can help you save even more with Genuine Cat Remanufactured parts. Remanufactured power train and hydraulic components cost less, but come with the same warranty and reliability as new products. Talk with your Cat dealer to learn more about reducing waste and saving money through Cat Remanufacturing.

D7R Track-Type Tractor Specifications

Engine

Engine Model	Cat® C9 ACERT™	
Maximum Power at 1,900 rpm		
Gross Power – ISO 14396	204 kW	274 hp
Net Power – ISO 9249	194 kW	260 hp
Rated Power at 2,100 rpm		
Gross Power – ISO 14396	192 kW	258 hp
Net Power – ISO 9249	179 kW	240 hp
Bore	112 mm	4.4 in
Stroke	149 mm	5.9 in
Displacement	8.8 L	537 in^3

- Net power advertised is the power available at the flywheel when engine is equipped with a fan at maximum speed, air cleaner, muffler and alternator.
- No deratings required up to 2286 m (7,500 ft) altitude, beyond 2286 m (7,500 ft) automatic derating occurs.

Transmission

1.0 Forward	3.52 km/h	2.19 mph
2.0 Forward	6.10 km/h	3.79 mph
3.0 Forward	10.54 km/h	6.55 mph
1.0 Reverse	4.54 km/h	2.82 mph
2.0 Reverse	7.85 km/h	4.88 mph
3.0 Reverse	13.58 km/h	8.44 mph

D7R Standard/XR/LGP
Differential Steer

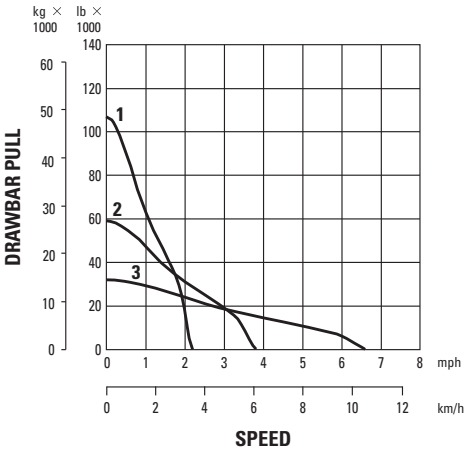

KEY
1 — 1st Gear
2 — 2nd Gear
3 — 3rd Gear

NOTE: Usable pull will depend upon weight and traction of equipped tractor.

Service Refill Capacities

Fuel Tank	479 L	126.5 gal
Cooling System	73 L	19.3 gal
Engine Crankcase	28 L	7.4 gal
Power Train	178 L	47 gal
Final Drives (each)	13 L	3.4 gal
Pivot Shaft	32 L	8.5 gal
Hydraulic Tank	54 L	14.3 gal

Weights

Operating Weight – Standard	24 962 kg	55,041 lb
Shipping Weight – Standard	20 288 kg	44,735 lb
Operating Weight – XR	25 441 kg	56,097 lb
Shipping Weight – XR	20 767 kg	45,791 lb
Operating Weight – LGP	27 101 kg	59,758 lb
Shipping Weight – LGP	22 380 kg	49,348 lb

- Operating weight includes lubricants, coolant, full fuel tank, standard track, ROPS cab, hydraulic controls, SU-blade, drawbar and operator.
- Shipping weight includes lubricants, coolant, 10% fuel tank, standard track, ROPS cab and hydraulic controls.

Undercarriage

Standard Width of Shoe – STD/XR	560 mm	22 in
Standard Width of Shoe – LGP	914 mm	36 in
Shoes/Side – STD	40	
Shoes/Side – XR	41	
Shoes/Side – LGP	43	
Grouser Height	71 mm	2.8 in
Track on Ground – STD	2870 mm	113 in
Track on Ground – XR	3048 mm	120 in
Track on Ground – LGP	3175 mm	125 in
Ground Contact Area (STD Track) – STD	3.21 m^2	4,972 in^2
Ground Contact Area (STD Track) – XR	3.41 m^2	5,280 in^2
Ground Contact Area (STD Track) – LGP	5.81 m^2	9,000 in^2
Ground Pressure (STD Track) – STD	76.32 kPa	11.07 psi
Ground Pressure (STD Track) – XR	73.22 kPa	10.62 psi
Ground Pressure (STD Track) – LGP	45.78 kPa	6.64 psi

- STD, XR and LGP with SU-blade, with rear drawbar only.
- Ground pressure is subject to change based on shoe width and machine overall configuration affecting operating weight.

Hydraulic Controls – Pump

Pump Type	Variable Displacement Piston	
Pump Capacity	38 500 kPa	5,584 psi
RPM at Rated Engine Speed	2,231 rpm	
Pump Output	289 L/min	76.3 gal/min
Lift Cylinder Flow	190 L/min	50.2 gal/min
Tilt Cylinder Flow	80 L/min	21.1 gal/min
Ripper Cylinder Flow	190 L/min	50.2 gal/min

Hydraulic Controls – Main Relief Valve

Pressure Setting	42 000 kPa	6,092 psi

Hydraulic Controls – Maximum Operating Pressure

Bulldozer, Lift	22 750 kPa	3,300 psi
Bulldozer, Tilt	17 225 kPa	2,498 psi
Ripper, Lift	22 750 kPa	3,300 psi
Ripper, Tilt	22 750 kPa	3,300 psi
Steering	38 000 kPa	5,511 psi

Blades

SU-Blade Capacity – STD/XR	6.86 m^3	8.98 yd^3
SU-Blade Width – STD/XR	3693 mm	145.4 in
S-Blade Capacity – LGP	5.89 m^3	7.70 yd^3
S-Blade Width – LGP	4545 mm	178.9 in

- Blade capacities are measured to recommended practice as to SAE J1265.

Ripper

Type	Adjustable Parallelogram	
Number of Pockets	3	
Weight with Three Shanks	3337 kg	7,357 lb
Overall Beam Width	2210 mm	87 in
Maximum Clearance Raised (under tip, pinned in bottom hole)	757 mm	29.8 in
Pitch Adjustment, Ripper Down		
Forward	15 deg	
Backward	10 deg	
Maximum Penetration	748 mm	29.5 in
Maximum Penetration Force	85 kN	19,109 lbf
Pryout Force	176.6 kN	39,705 lbf

Standards

ROPS/FOPS	ROPS (Rollover Protective Structure) offered by Caterpillar for the machine meets ROPS criteria ISO 3471:2008 FOPS (Falling Object Protective Structure) meets ISO 3449:2005
Brakes	Brakes meet the standard SAE J/ISO 10265 MAR99
Cab	Meets the appropriate standards as listed below

- The operator sound exposure Leq (equivalent sound pressure level) measured according to the work cycle procedures specified in ISO 6396 is 83 dB(A), for a cab offered by Caterpillar, when properly installed and maintained and tested with the doors and windows closed.
- Hearing protection may be needed when operating with an open operator station and cab (when not properly maintained or doors/windows open) for extended periods or in noisy environment.
- The exterior sound pressure level for the standard machine measured at a distance of 16 m (52.5 ft) radius according to the test procedures specified in ISO 6395, mid-gear-moving operation, is 116 dB(A).

D7R Track-Type Tractor Specifications

Dimensions

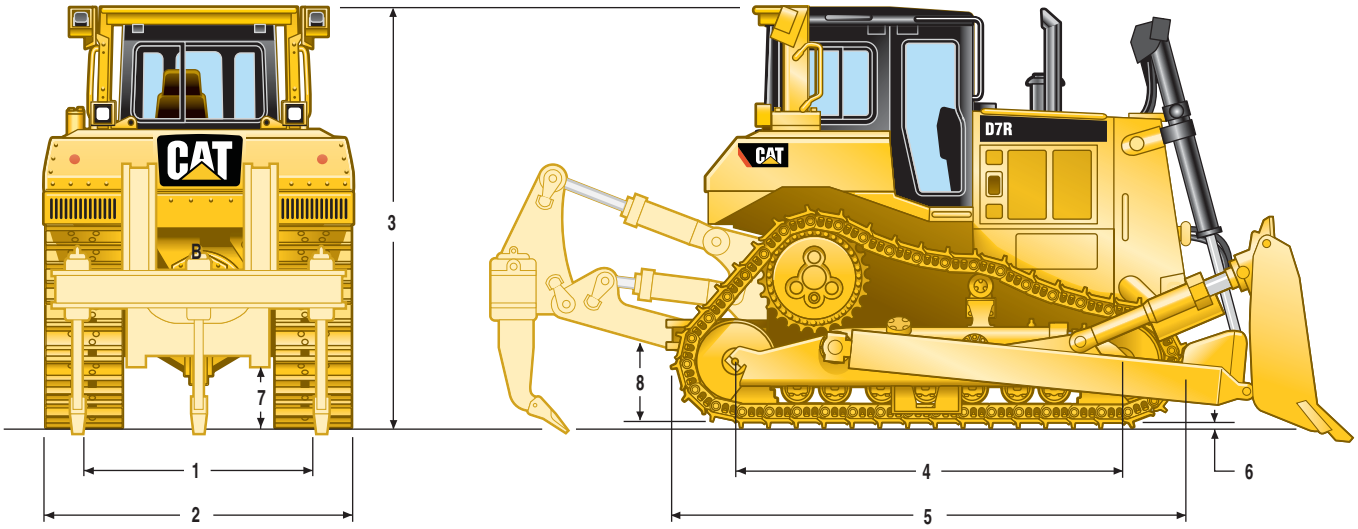

	STD	XR	LGP
1 Track Gauge	1981 mm (78 in)	1981 mm (78 in)	2235 mm (88 in)
2 Width of Tractor:			
Over Trunnions	2876 mm (113 in)	2876 mm (113 in)	3396 mm (134 in)
Without Trunnions (standard shoe width)	2541 mm (100 in)	2541 mm (100 in)	3143 mm (124 in)
3 Machine Height from Tip of Grouser:			
Exhaust Stack	3244 mm (127.7 in)	3244 mm (127.7 in)	3325 mm (131 in)
OROPS	3290 mm (129.5 in)	3290 mm (129.5 in)	3370 mm (132.7 in)
EROPS	3280 mm (129 in)	3280 mm (129 in)	3360 mm (132.3 in)
From Ground Face of Shoe	563 mm (22.2 in)	563 mm (22.2 in)	642 mm (25.3 in)
4 Length of Track on Ground	2870 mm (113 in)	3048 mm (120 in)	3175 mm (125 in)
5 Length of Basic Tractor (with drawbar)	4736 mm (186 in)	4736 mm (186 in)	4736 mm (186 in)
With the following attachments add to basic tractor length:			
Ripper (with tip at ground line)	1196 mm (46.9 in)	1196 mm (46.9 in)	1196 mm (46.9 in)
Ripper (with tip fully raised)	992 mm (39 in)	992 mm (39 in)	992 mm (39 in)
Winch	77 mm (3 in)	77 mm (3 in)	77 mm (3 in)
S Blade	—	—	1071 mm (41.2 in)
SU Blade	1301 mm (51.2 in)	1301 mm (51.2 in)	—
6 Height of Grouser	71 mm (2.8 in)	71 mm (2.8 in)	71 mm (2.8 in)
7 Ground Clearance	416 mm (16.4 in)	416 mm (16.4 in)	496 mm (19.5 in)
8 Drawbar Height (grouser tip to center of clevis)	634 mm (24.9 in)	634 mm (24.9 in)	713.4 mm (28.1 in)

Bulldozer Specifications

Bulldozer Specifications	7SU	7S LGP
Blade capacity (SAE J1265)	6.86 m^3 (8.98 yd^3)	5.98 m^3 (7.70 yd^3)
Width (over end bits)	3693 mm (145.4 in)	4545 mm (179 in)
Height	1524 mm (60 in)	1343 mm (53 in)
Digging depth	527 mm (20.7 in)	668 mm (29.3 in)
Ground clearance	1145 mm (45 in)	1153 mm (45 in)
Maximum tilt	799 mm (31.5 in)	686 mm (27 in)
Weight (without hydraulic controls)	3593 kg (7,923 lb)	3732 kg (8,229 lb)

D7R Standard Equipment

Standard equipment may vary. Consult your Cat dealer for details.

ELECTRICAL

- Alarm, backup
- Alternator, 95-Amp, brushless
- Batteries, 2 maintenance free 12V (24V system)
- Converter, 12V, 10-Amp with 2 outlets
- Connector, diagnostic
- Lights, 4 (2 mounted on the lift cylinder facing forward, 2 mounted on the fuel tank facing rearward)
- Electric start, 24V
- Horn, forward warning

OPERATOR ENVIRONMENT

- Air conditioner, under-hood
- Armrest, adjustable
- Cab, ROPS/FOPS
- Decelerator pedal
- Differential steering control
- Cat Monitoring System
  - – Coolant temperature
  - – Hydraulic temperature
  - – Power train temperature
  - – Fuel level
  - – Tachometer
  - – Hour meter
  - – Diagnostics
- Food pads, dash
- Heater
- Hydraulic controls, pilot operated with electronic deactivation switch
- Mirror, rearview
- Radio ready
- Seat, adjustable contour suspension
- Seatbelt, retractable, 76 mm (3 in)
- Throttle switch, electronic
- Hydraulic implement lockout, electronic
- Wipers, two (2) speed

POWER TRAIN

- Cat C9 (8.8 L/537 in^3) diesel engine
- Electronic engine control for hi and lo idle and selectable maximum engine speed
- Aluminum bar plate radiator
- Air cleaner, precleaner with strata tube dust ejector
- Air filter with electronic service indicator
- Aluminum bar plate after-cooler, air to air (ATAAC)
- Coolant, extended life
- Fan, blower, direct drive
- Final drives, 3-planet double reduction planetary
- Fuel priming pump, electric
- Muffler with mitered stack
- Parking brake
- Pre-screener
- Torque divider
- Planetary transmission, mechanical power shift 3F/3R speeds
- Turbocharger, waste-gate
- Water separator

UNDERCARRIAGE

- Carrier rollers (LGP)
- Carrier rollers ready (STD, XR)
- Equalizer bar, heavy duty
- Guards, end track guiding
- Guards, center track guiding (LGP)
- Idlers, lifetime lubricated
- Rollers, lifetime lubricated track
- Track roller frames, tubular
- Track adjusters, hydraulic
- Sprocket rim segments, replaceable
  - – Track, heavy duty Sealed & Lubricated
    - • Standard arrangement
      - – 560 mm (22 in), ES, 40-section
    - • XR arrangement
      - – 560 mm (22 in), ES, 41-section
    - • LGP arrangement
      - – 914 mm (36 in), MS, 43-section

OTHER STANDARD EQUIPMENT

- CD-ROM parts book
- Engine enclosures, perforated
- Mounting, lift cylinder
- Lift cylinder with lines, LH
- Lift cylinder with lines, RH
- Front pull device
- Guards, hinged bottom
- Hood, perforated
- Hydraulics, load sensing, dozer lift and tilt
- Oil cooler, hydraulic
- Product Link ready
- Radiator doors, louvered, hinged
- Sampling ports
  - – Engine oil
  - – Power train oil
  - – Hydraulic oil
  - – Engine coolant
- Tool box
- Padlocks for battery compartment and fuel drain valve
- Padlock capable compartments

Weights are approximate.

	Additional Weight	
	kg	lb
ELECTRICAL		
Converter, 24-Volt to 12-Volt	1	2
Alternator, 150-Amp	13	29
Lights, additional 4 fwd, 2 rwd (Additional 2 lights mounted on lift cylinder, 2 mounted on ROPS fwd and 2 mounted on ROPS rwd)	59	130
Lights, additional 2 fwd (Mounted on ROPS)	21	46
ELECTRONICS (Mandatory selection)		
Cat Product Link PL321 – Satellite	3	7
Cat Product Link PL522 –Cellular	3	7
No Product Link (for regions with sanctions)	0	0
GUARDS		
Guard, crankcase, ES	80	176
Guard, radiator, HD, louvre	50	110
Guard, fuel tank (F/U/W STD, XR and LGP)	236	520
Screen, rear	86	190
Screen, rear (F/U/W ROPS, air conditioner)	71	157
Screen, side	36	79
OPERATOR ENVIRONMENT		
Seat, cloth, air suspension	2	4
Air conditioner, ROPS mounted	277	611
Canopy (includes mechanical suspension vinyl seat)	–300	–661
POWER TRAIN		
Grid, radiator core protector	5	11
Precleaner, turbine with screen	2	4
Drains, ecology, power train	1	2

	Additional Weight	
	kg	lb
FEATURE PACKAGES		
Sweeps Package	295	650
F/U/W ROPS cab or canopy Includes: sweep, lights (8) and guards.		
Service Package	12	27
Includes: fast fuel and oil change system.		
Stockpile Package	185	408
Includes: turbine precleaner, solid engine hood, aluminum bar plate trash resistant radiator, ejector fan, additional 4 lights fwd, additional 2 lights rwd, 150-Amp alternator, ROPS mounted A/C. Requires: track with trapezoidal holes, rear counterweight, additional counterweight slabs (2).		
Cold Weather Package	78	172
Includes: HD batteries, HD starter, 220V heater – engine coolant, heater – diesel fuel, solid engine hood, reversible fan, anti-freeze (–50° C/–58° F), starting aid, ether, automatic. Requires: 150-Amp alternator and ROPS A/C.		
Cold Weather Package, Extreme	22	49
Includes: cab with dual pane glass, arctic fluids (engine, pivot shaft, implement hydraulics, final drives and undercarriage rollers/idlers). Requires: Cold Weather Package		
Waste Handling Package, STD	2100	4,630
Includes: 95-Amp ducted and sealed alternator, ES crankcase guard, HD radiator louvered guard, final drive and idler seal guard, turbine precleaner with screen, thermal shield, dozer line guards, chassis guards and seal, heavy-duty handles, rear striker bar with 2 rear counterweight, trash resistant radiator aluminium bar plate and ejector fan.		
Waste Handling Package, LGP	2100	4,630
Includes: 95-Amp ducted and sealed alternator, ES crankcase guard, HD radiator louvered guard, final drive and idler seal guard, turbine precleaner with screen, thermal shield, dozer line guards, chassis guards and seal, heavy-duty handles, rear striker bar with 2 rear counterweight, trash resistant radiator aluminium bar plate and ejector fan.		

	Additional Weight	
	kg	lb
UNDERCARRIAGE		
40-Section Standard Track Roller Frame		
Track, 610 mm/24 in ES (40-Section) HD	236	520
Track, 610 mm/24 in ES (40-Section) HD trapezoidal	188	141
41-Section XR Track Roller Frame		
Track, 610 mm/24 in ES (41-Section) HD	192	423
43-Section LGP Track Roller Frame		
Track, 914 mm/36 in ES (43-Section) HD trapezoidal	600	1,323
Track, 914 mm/36 in self cleaning (43-Section) HD	–546	–1,270
Guards, Track Guiding, HD S&L		
Guide, track, moderate service, STD	85	187
Guide/guard, track, heavy duty, STD	292	644
Guide, track, moderate service, LGP	107	236
Guide/guard, track, heavy duty, LGP	405	893
OTHER ATTACHMENTS		
Drawbar, rigid	234	516
Counterweight, rear	1061	2,340
Counterweight, rear slab	345	761
TECHNOLOGY PRODUCTS		
Installation, AccuGrade ready (F/U/W rear attachment)	22	50
Hydraulics, AccuGrade	0	0
HYDRAULICS		
Hydraulics, ripper	43	95
Includes: ripper hydraulics and light, ripper.		

D7R Attachments

Weights are approximate.

	Additional Weight	
	kg	lb
REAR ATTACHMENTS		
7 ripper, multi-shank, includes 3 shanks	3607	7,952
WINCH ARRANGEMENTS		
All winch and installation packages are to be supplied direct by customer/dealer selected winch OEM supplier. Price list will highlight contact address and websites for Allied and PACCAR winch supplier.		
FIELD INSTALLED ATTACHMENTS		
Guard, clamshell, STD	130	286
Guard, clamshell, LGP	163	360
Carrier roller, STD/XR	156	344
Guard, wire	1	2
Provides Universal wire guard for lighting combinations		

	Individual Component Weight	
	kg	lb
BULLDOZER		
Bulldozer Package, SU	1737	3,821
Includes: tilt cylinder and hydraulic lines, brace, push-arms and trunnions.		
Bulldozer Package, SLGP	1741	3,830
Includes: tilt cylinder and hydraulic lines, brace, push-arms and trunnions.		
BULLDOZER ATTACHMENTS		
7SU blade	1856	4,093
7SU landfill blade with trash rack	2404	5,300
7SU blade with wear plates	2188	4,824
7SU blade with AccuGrade mounting	1927	4,249
7SLGP blade	1991	4,389
7SGP landfill blade with trash rack	2349	5,180
7SLGP blade with AccuGrade mounting	2062	4,536

Notes

D7R Track-Type Tractor

For more complete information on Cat products, dealer services, and industry solutions, visit us on the web at **www.cat.com**

© 2012 Caterpillar Inc.
All rights reserved

AEHQ6414 (02-2012)

Materials and specifications are subject to change without notice. Featured machines in photos may include additional equipment. See your Cat dealer for available options.

CAT, CATERPILLAR, SAFETY.CAT.COM, their respective logos, “Caterpillar Yellow” and the “Power Edge” trade dress, as well as corporate and product identity used herein, are trademarks of Caterpillar and may not be used without permission.